Http://www.parsun.com.cn

PARSUN

百胜

零件目錄
PARTS CATALOGUE

T3.6 BM
T2.5

苏州百胜动力机器有限公司

SUZHOU PARSUN POWER MACHINE CO., LTD

目录
CONTENTS

控制系统 ———————————————————————————————— 1~2
CONTROL ———————————————————————————————— 1~2
托架 ———————————————————————————————— 3~4
BRACKET ———————————————————————————————— 3~4
操舵系统 ———————————————————————————————— 5~6
STEERING ———————————————————————————————— 5~6
水上装置壳体 ———————————————————————————————— 7~8
UPPER CASING ———————————————————————————————— 7~8
水下驱动组件 ———————————————————————————————— 9~10
LOWER DRIVE ASSY ———————————————————————————————— 9~10
水下装置壳体和驱动系统 ———————————————————————————————— 11~12
LOWER CASING & DRIVE ———————————————————————————————— 11~12
点火系统 ———————————————————————————————— 13~14
IGNITION ASS'Y ———————————————————————————————— 13~14
气缸和曲轴箱 ———————————————————————————————— 15~16
CYLINDER & CRANKCASE ———————————————————————————————— 15~16
曲轴和活塞 ———————————————————————————————— 17~18
CRANKSHAFT & PISTON ———————————————————————————————— 17~18
燃油系统 ———————————————————————————————— 19~20
FUEL ———————————————————————————————— 19~20
进气系统 ———————————————————————————————— 21
INTAKE ———————————————————————————————— 21
化油器总成 ———————————————————————————————— 22~23
CARBURETOR ASSY ———————————————————————————————— 22~23
底罩 ———————————————————————————————— 24
BOTTON COWLING ———————————————————————————————— 24
顶罩 ———————————————————————————————— 25
TOP COWLING ———————————————————————————————— 25
修理件1 ———————————————————————————————— 26~27
REPARE KIT 1 ———————————————————————————————— 26~27
修理件2 ———————————————————————————————— 28~29
REPARE KIT 2 ———————————————————————————————— 28~29

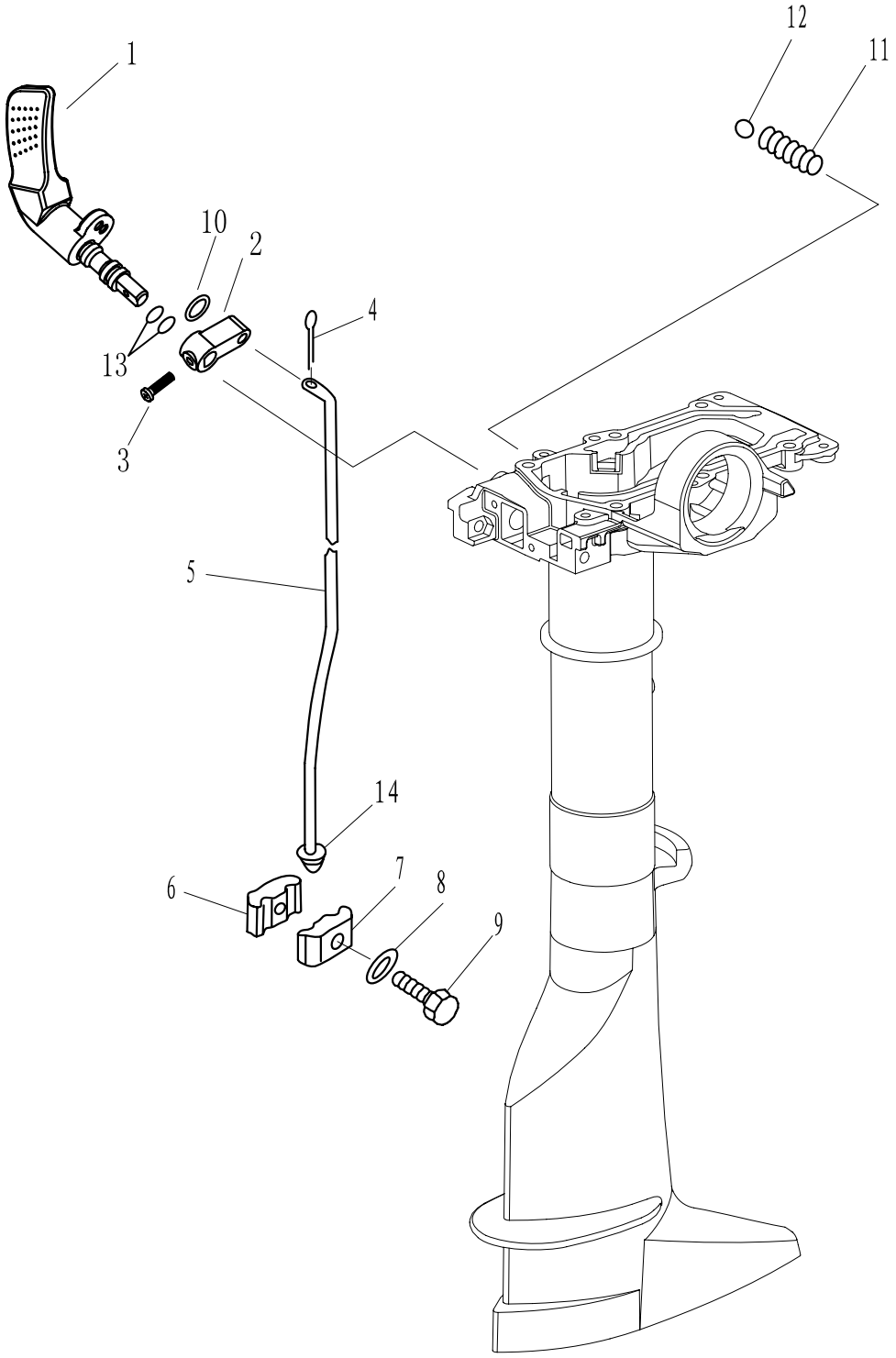
1
2
3
4
5
6
7
8
9
10
11
12
13
14

零件手册

零部件名称: 控制系统

PARTS NAME: CONTROL

SN. 参照号码	PART NO. 零件编号	DESCRIPTION 零件名称(中文)	DESCRIPTION 零件名称(英文)	QTY 数量					REMARKS 备注
1	T3.6-02020000	变档手柄组件	HANDLE, GEAR SHIFT	1					
2	T3.6-02000004	变档摆杆	PENDULUM BAR, GEAR SHIFT	1					
3	GB/T818-M4X12	十字槽盘头螺钉M4X12	BOLT M4X12	1					
4	GB/T91-1.6x12	开口销1.6x12	COTTER PIN 1.6x12	1					
5	T3.6-02000003	变档连杆	SHIFT ROD	1					
6	F2.6-00000001	变档连接器A	CONNECTOR, SHIFT ROD A	1					
7	F2.6-00000002	变档连接器B	CONNECTOR, SHIFT ROD B	1					
8	F4-00000005	大垫圈	BIG WASHER	1					
9	GB/T5783-M6x20	六角螺栓M6x20	BOLT M6x20	1					
10	GB/T97.1-5	平垫圈5	WASHER 5	2					
11	F4-02000003	变档弹簧	SPRING, GEAR SHIFT	1					
12	GB308-8	钢珠8	BALL 8	1					
13	JISB2401	O形密封圈P9	O-RING P9	2					

零部件名称:	托架
PARTS NAME:	BRACKET

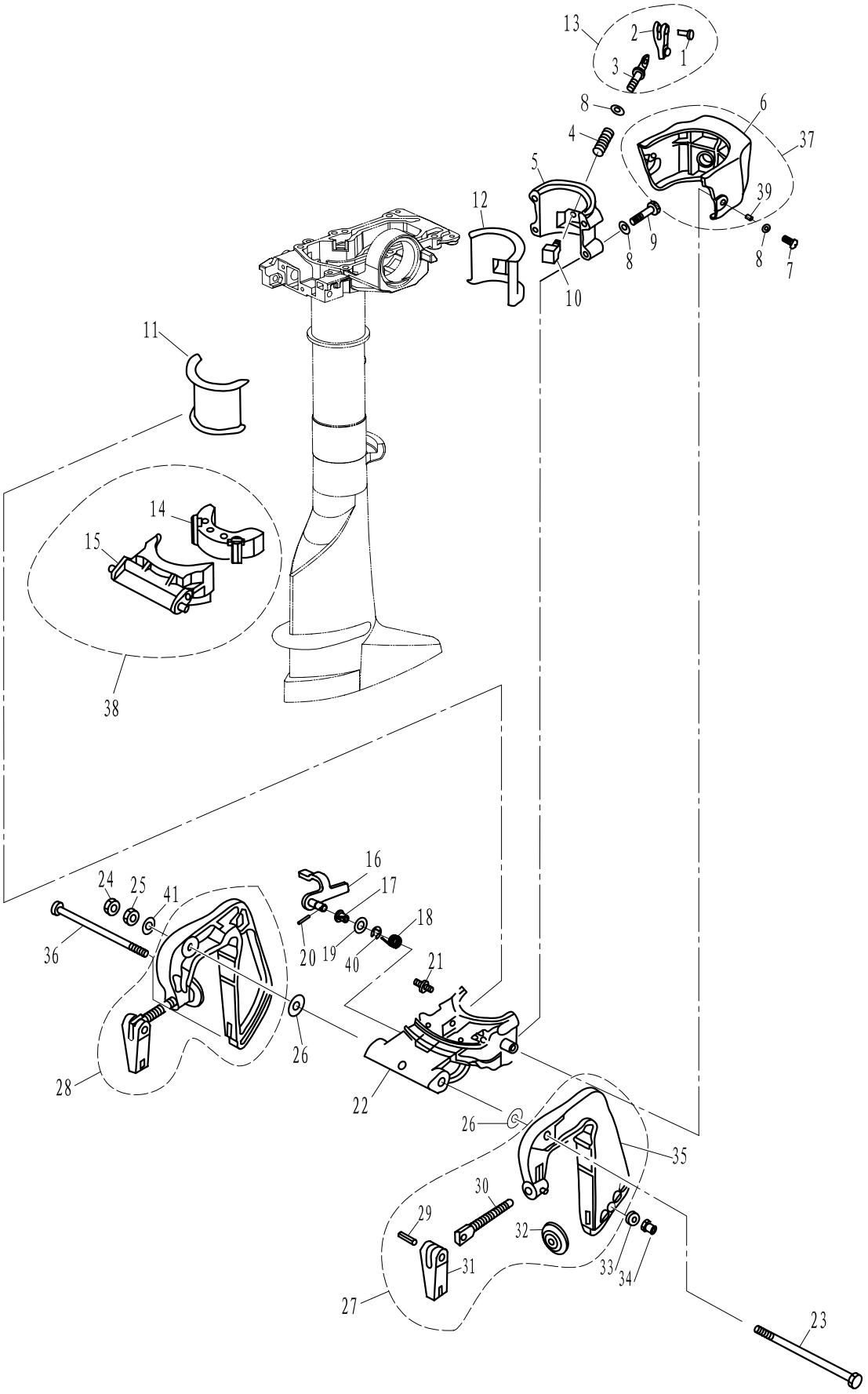

零件手册

零部件名称: 托架

PARTS NAME: BRACKET

SN. 参照号码	PART NO. 零件编号	DESCRIPTION 零件名称(中文)	DESCRIPTION 零件名称(英文)	QTY 数量					REMARKS 备注
1	GB/T875-4X11	扁平头半空心铆钉4x11	RIVET 4X11	1					
2	F4-01060002	锁紧手柄	CLAMP HANDLE	1					
3	F2.6-01050101	锁紧手柄螺杆	LOCKED BOLT	1					
4	F2.6-01050002	压缩弹簧	SPRING	1					
5	F2.6-01050001	旋转支架盖	COVER, SWIVEL BRACKET	1					
6	F2.6-00000101	托架护盖	COVER, BRACKET	1					
7	GB/T818-M6X16	十字槽盘头螺钉M6x16	SCREW, PAN HEAD M6X16	2					
8	GB/T97.1-6	平垫圈6	WASHER 6	6					
9	GB/T5783-M6x30	六角螺栓M6x30	BOLT M6X30	4					
10	F2.6-01050200	锁紧块组件	LOCKED BLOCK ASSY	1					
11	F2.6-01000003	旋转支架衬套A	BUSHING A, SWIVEL BRACKET	1					
12	F2.6-01000004	旋转支架衬套B	BUSHING B, SWIVEL BRACKET	1					
13	F2.6-01050100	锁紧手柄组件	LOCKED HANDLE ASSY	1					
14	F2.6-01040100	承推减震器	DAMPER	1					
15	F2.6-01040001	承推托架	BRACKET, THRUST PLATE	1					
16	F2.6-01030100-A	角度锁紧手柄组件	TILT LOCKED HANDLE ASSY	1					
17	F4-01090006	衬套	BUSHING	1					
18	F2.6-01030003-A	角度锁紧手柄扭簧	SPRING, TILT HANDLE	1					
19	F2.6-01030009	角度手柄衬套	BUSHING,TILT HANDLE	1					
20	GB/T879.2-2x10	轻型直槽弹性圆柱销Ø2x10	PIN Ø2x10	1					
21	GB/T7940.1-M6	直通式压注油杯M6	GREASE CUP, DIRECT INFUSE M6	1					
22	F2.6-01030001	旋转支架座	BASE SEAT, SWIVEL BRACKET	1					
23	F2.6-01000001	六角螺栓 M8x135	BOLT M8x135	1					
24	GB/T6172.1-M8	六角薄螺母 M8	HEXAGON THIN NUT M8	1					
25	GB/T6170-M8	六角螺母 M8	HEXAGON NUT M8	1					
26	GB/T96-8	大垫圈 8	BIG WASHER 8	2					
27	F2.6-01010000	左夹紧托架组件	BRACKET LEFT ASSY	1					
28	F2.6-01020000	右夹紧托架组件	BRACKET RIGHT ASSY	1					
29	F4-01010005	艉板夹紧手柄铆钉	RIVET, CLAMP HANDLE	2					
30	F4-01010002	艉板夹紧螺杆	CLAMP BOLT	2					
31	F4-01010004	艉板夹紧手柄	CLAMP HANDLE	2					
32	F4-01010003	艉板夹紧圆盘	CLAMP PLATE	2					
33	F2.6-01000002	螺栓垫管	BUSH ,BOLT	1					
34	GB/T889.1-M6	非金属嵌件六角锁紧螺母M6	NUT, METALLOID EMBEDED HEXAGON M6	1					
35	F2.6-01010001	左夹紧托架	BRACKET,CLAMP(LEFT)	1					
36	GB/T5782-M6x125	六角螺栓 M6x125	BOLT M6x125	1					
37	F2.6-00000100	托架护盖组件	COVER, BRACKET ASSY	1					
38	F2.6-01040000	承推托架组件	BRACKET, THRUST PLATE ASSY	1					
39	F2.6-00000102	护盖衬管	BUSHING	2					
40	GB/T896-6	开口挡圈 6	CIRCLIP 6	1					
41	GB/T97.1-8	平垫圈 8	WASHER 8	1					

零部件名称:	操舵系统
PARTS NAME:	STEERING

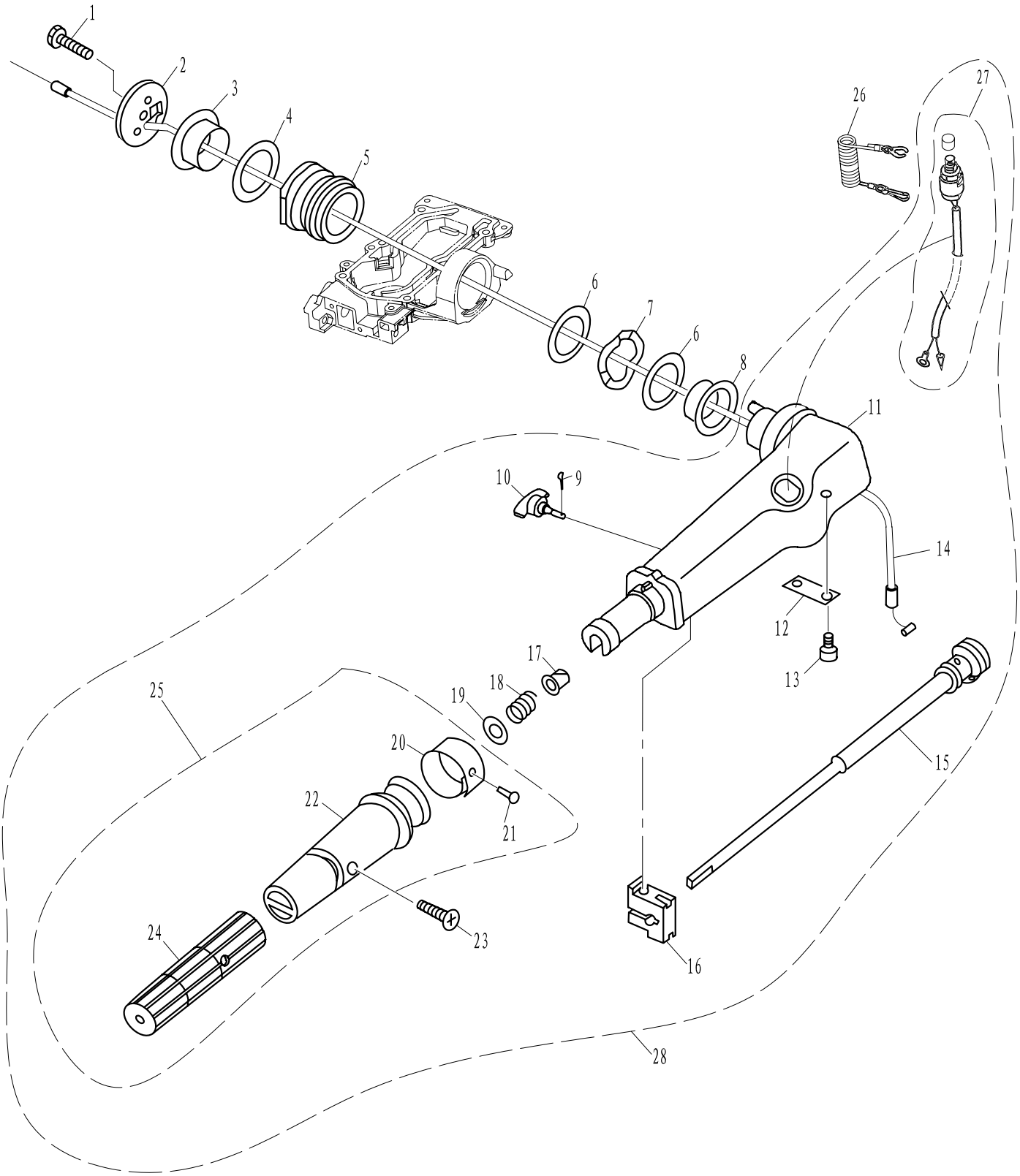

零件手册

零部件名称: 操舵系统

PARTS NAME: STEERING

SN. 参照号码	PART NO. 零件编号	DESCRIPTION 零件名称(中文)	DESCRIPTION 零件名称(英文)	QTY 数量					REMARKS 备注
1	GB/T5783-M8x25	六角螺栓M8x25	BOLT M8x25	1					
2	F4-01000014	操舵手柄盖板	COVER, STEERING TILLER	1					
3	F4-01000008	操舵手柄衬套B	BUSH B, STEERING TILLER	1					
4	F4-01000011	衬套垫圈A	WASHER A,BUSH	1					
5	F4-05000014	操舵手柄减震器组件	DAMPER ASSY, STEERING TILLER	1					
6	F4-01000010	衬套垫圈B	WASHER B,BUSH	2					
7	F4-01000012	手柄衬套波形垫圈	WAVE BUSH	1					
8	F4-01000009	操舵手柄衬套A	BUSH A, STEERING TILLER	1					
9	GB/T91-1.6x12	开口销φ1.6x12	COTTER PIN 1.6x12	1					
10	F4-01090200	阻力调整旋钮组件	BOLT ,FRICTION ADJUSTING	1					
11	F4-01090001	操舵手柄	STEERING TILLER	1					
12	F4-01090002	节气门杆固定板	MOUNTED PLATE, THROTTLE	1					
13	GB/T818-M5x12	十字槽盘头螺钉M5x12	PAN HEAD SCREW M5x12	2					
14	T3.6-04000600	油门钢索组件	THROTTLE CABLE ASSY	1					
15	F4-01090100	节气门杆组件	LEVER, THROTTLE	1					
16	F4-01090003	操舵手柄握把摩擦块	FRICTION BLOCK	1					
17	F4-01090006	衬套	BUSHING	1					
18	F4-01090007	压缩弹簧	SPRING	1					
19	GB/T848-10	小垫圈10	WASHER 10	1					
20	T3.6-02010001	油门标志牌	INDICATOR,THROTTLE	1					
21	GB/T827-2x5	标牌铆钉φ2x5	RIVET Ø2x5	1					
22	T3.6-02010101	操舵手柄塑胶套	PLASTIC COVER,HANDLE	1					
23	GB/T820-M5x25	十字槽半沉头螺钉M5x25	CHAMFER HEAD SCREW M5x25	1					
24	T15-01020302	操舵手柄橡胶套	RUBBER COVER,HANDLE	1					
25	T3.6-02010100	操舵手柄塑胶套组件	STEERING HANDLE ASSY	1					
26	F4-01090401	引擎停止安全索	STOPER, HANG ROPE ASSY	1					
27	F4-01090400	急停开关组件	ENGINE STOP SWITCH ASSY	1					
28	T3.6-02040000	操舵手柄总成	STEERING TILLER ASSY	1					

零部件名称:	水上装置壳体
PARTS NAME:	UPPER CASING

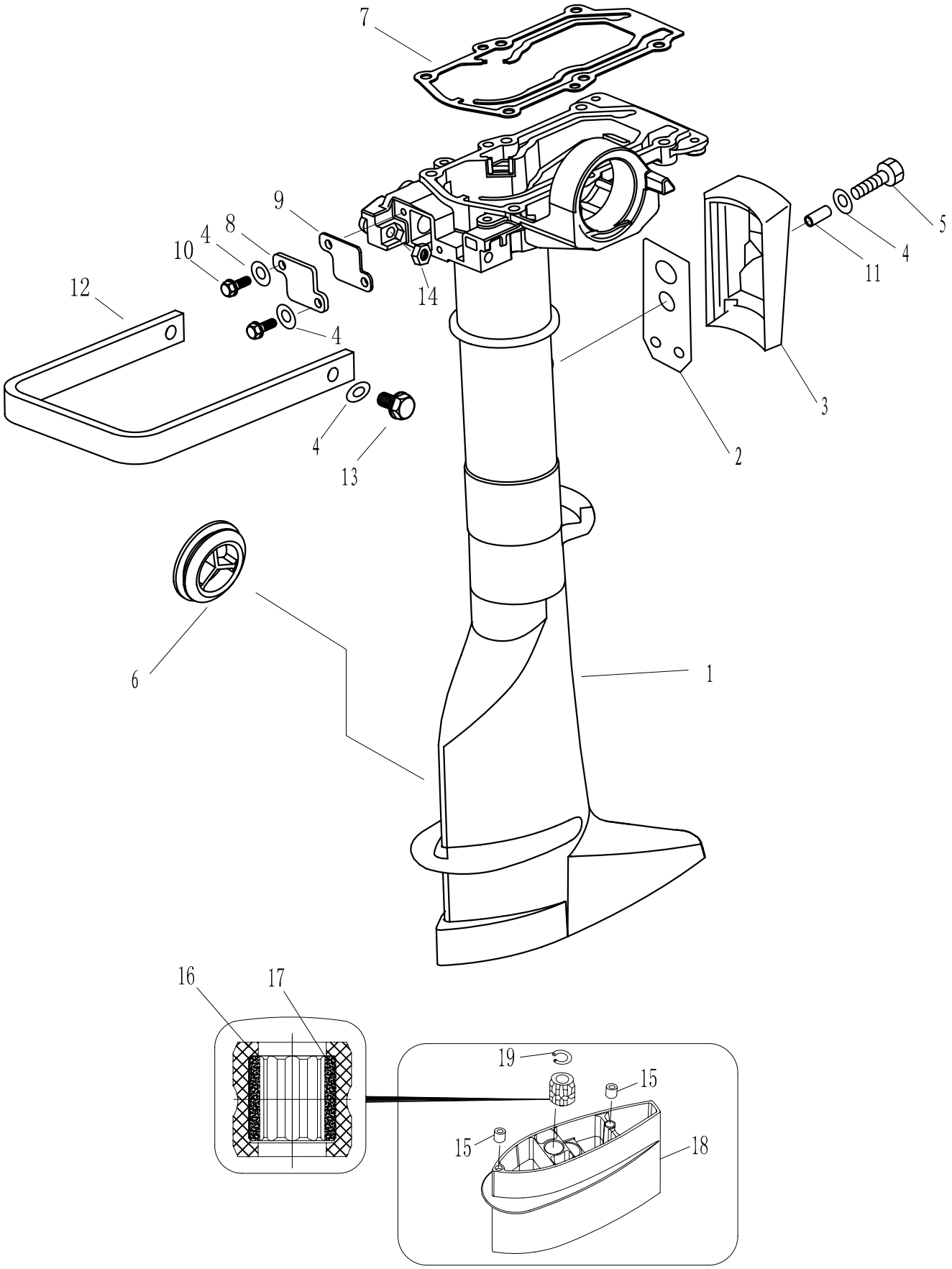

零件手册

零部件名称: 水上装置壳体

PARTS NAME: UPPER CASING

SN. 参照号码	PART NO. 零件编号	DESCRIPTION 零件名称(中文)	DESCRIPTION 零件名称(英文)	QTY 数量					REMARKS 备注
1	T3.6-02000001	水上装置壳体	UPPER CASING	1					
2	T3.6-02000009	排气盖板垫	GASKET,EXHAUST COVER	1					
3	F2.6-02000004	排气盖板	EXHAUST COVER	1					
4	GB/T97.1-6	平垫圈6	WASHER 6	5					
5	GB/T818-M6x16	十字槽盘头螺钉M6x16	PAN HEAD SCREW M6x16	2					
6	F4-02000012	水上装置橡胶堵头	RUBBER PLUG,UPPER	1					
7	T3.6-00000001	发动机密封垫	GASKET,ENGINE	1					
8	T3.6-02000005	变档摆杆盖板	COVER, PENDULUM BAR	1					
9	T3.6-02000006	盖板密封垫	GASKET,COVER	1					
10	GB/T5783-M5X12	六角螺栓M5x12	BOLT M5X12	2					
11	F2.6-00000102	护盖衬管	BUSHING, COVER	1					
12	T3.6-02000007	手把	HANDEL	1					
13	GB/T5783-M6x25	六角螺栓M6x25	BOLT M6x25	2					
14	GB/T6170-M6	六角螺母M6	HEXAGON NUT M6	2					
15	F4-00000001	空心定位销	PIN ,HOLLOW	2					
16	F4-02030003	驱动轴橡胶衬套	RUBBER BUSHING	1					
17	F4-02030002	驱动轴衬套	BUSHING, DRIVE SHAFT	1					
18	F4-02030001	接长体	EXTENSION ASSY	1					
19	GB/T 893.1-22	孔用弹性挡圈22	CIRCLIP 22	1					

零部件名称:	水下驱动组件
PARTS NAME:	LOWER DRIVE ASSY

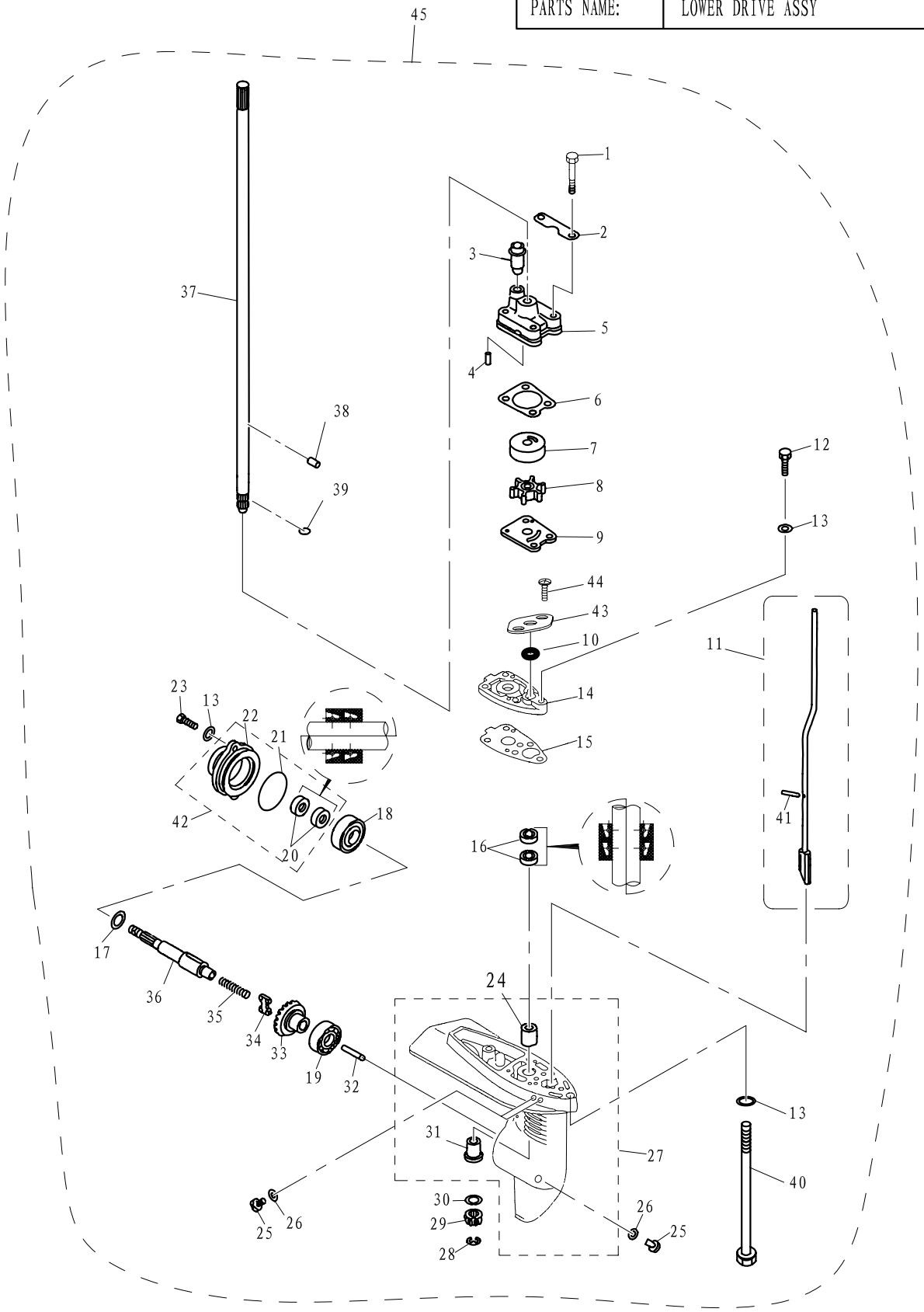

SN. 参照号码	PART NO. 零件编号	DESCRIPTION 零件名称(中文)	DESCRIPTION 零件名称(英文)	QTY 数量					REMARKS 备注
1	GB/T5782-M6x45	六角头螺栓M6x45	HEXAGON BOLT M6x45	4					
2	F4-03000020	泵壳固定板	PLATE ,WATER PUMP FIXED	2					
3	F4-03000021	泵壳橡胶管	RUBBER TUBE ,WATER PUMP	1					
4	F4-03000013	水泵座定位销	PIN ,WATER PUMP	2					
5	F4-03000019	水泵壳	HOUSING ,WATER PUMP	1					

零部件名称: 水下驱动组件

PARTS NAME: LOWER DRIVE ASSY

SN. 参照号码	PART NO. 零件编号	DESCRIPTION 零件名称(中文)	DESCRIPTION 零件名称(英文)	QTY 数量					REMARKS 备注
6	F4-03000018	泵壳密封垫	GASKET ,WATER PUMP COVER	1					
7	F4-03000017	水泵内壳	INNER COVER, WATER PUMP	1					
8	F4-03060000	水泵叶轮	IMPELLER ,WATER PUMP	1					
9	F4-03000015	外挡板	GUIDE PLATE, WATER PUMP	1					
10	F2.6-03000009	O形密封圈	O-RING	1					
11	T3.6-03010000	变档凸轮组件	CAM ASSY, SHIFT ROD LONG	1					L
	T3.6-03010000S	变档凸轮组件	CAM ASSY, SHIFT ROD SHORT	1					S
12	GB/T5783-M6x25	六角头螺栓M6x25	HEXAGON BOLT M6x25	1					
13	GB/T97.1-6	平垫圈6	WASHER 6	5					
14	F4-03000012	水泵座	BASE ,WATER PUMP	1					
15	F4-03000011	水泵座密封垫	GASKET, WATER PUMP BASE	1					
16	F4-03000027	驱动轴下油封 10.8x21x7	OIL SEAL 10.8x21x7	2					
17	E4-03000003	螺旋桨轴垫圈	WASHER,SHAFT PROPELLER	1					
18	GB/T276-94	深沟球轴承6302	DEEP GROOVE BALL BEARING 6302	1					
19	GB/T276-94	深沟球轴承6004C2	DEEP GROOVE BALL BEARING 6004C2	2					
20	F4-03050002	螺旋桨轴油封13x22x7	OIL SEAL 13x22x7	2					
21	JISB2401 P48	水下装置壳体盖O形圈	O-RING P48	1					
22	F4-03050001	水下装置壳体盖	GEAR CASE GLAND	1					
23	GB/T5783-M6x20	六角头螺栓M6x20	HEXAGON BOLT M6x20	2					
24	F4-03000003	不带档边筒形轴承	CYLINDRICAL BEARING	1					
25	F4-03000023	注油孔螺塞	PLUG, STRAIGHT SCREW	3					
26	F4-03000024	注油孔螺塞垫圈	GASKET, STRAIGHT SCREW PLUG	3					
27	F4-03000001	水下装置壳体	GEAR CASE	1					
28	GB/T896-6	开口档圈6	CIRCLIP 6	1					
29	F4-03000007	主动齿轮	PINION	1					
30	F4-03000006	主动齿轮垫圈	WASHER, PINION	1					
31	F4-03000002	带档边筒形轴承	CYLINDRICAL BEARING	1					
32	F4-03000008	变档柱塞	PLUGER ,SHIFT	1					
33	F4-03010000	正档齿轮组件	FORWARD GEAR ASSY	1					
34	F4-03030002	离合器块	CLUTCH	1					
35	F4-03030003	离合器块压簧	SPRING, CLUTCH	1					
36	T3.6-03020001	螺旋桨轴	PROPELLER SHAFT	1					
37	T3.6-03000001	驱动轴	SHAFT, DRIVE LONG	1					L
	T3.6-03000001S	驱动轴	SHAFT, DRIVE SHORT	1					S
38	F4-03000016	叶轮定位销	PIN, WATER PUMP	2					
39	F4-03000005	轴用钢丝档圈	CLIP	1					
40	GB/T5782-M6x167	六角头长螺栓M6x167	BOLT M6X167 L	2					
	GB/T5782-M6x40	六角头长螺栓M6x40	BOLT M6X40 S	2					
41	GB/T879.2-Ø2.5x20	轻型直槽圆柱销Ø2.5x20	PIN	1					
42	F4-03050000	水下装置壳体盖组件	GLAND ASSY, GEAR CASE	1					
43	F4-03000028	O形圈挡板	PLATE,O-RING	1					
44	GB/T818-M5x6	十字槽盘头螺钉 M5x6	PAN HEAD SCREW M5X6	2					
45	T3.6-03000000L	水下装置壳体总成L	LGEAR CASE ASSY LONG	1					L
	T3.6-03000000S	水下装置壳体总成S	GEAR CASE ASSY SHORT	1					S

零部件名称:	水下装置壳体和驱动系统
PARTS NAME:	LOWER CASING & DRIVE 2

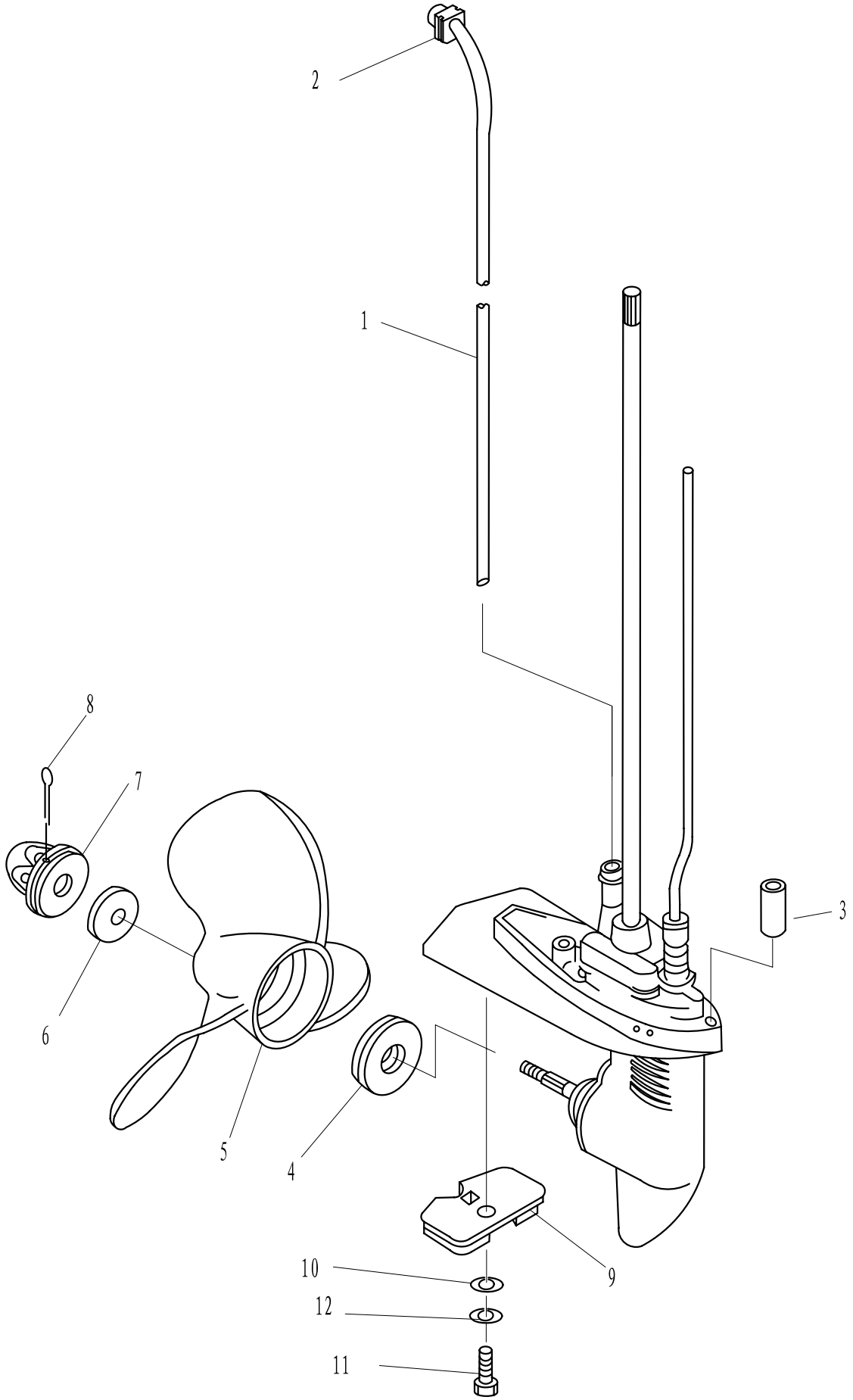

零件手册

零部件名称: 水下装置壳体和驱动系统

PARTS NAME: LOWER CASING & DRIVE 2

SN. 参照号码	PART NO. 零件编号	DESCRIPTION 零件名称(中文)	DESCRIPTION 零件名称(英文)	QTY 数量					REMARKS 备注
1	T3.6-02000002L	进水管	WATER TUBE ASSY LONG	1					
	T3.6-02000002S	进水管	WATER TUBE ASSY SHORT	1					
2	T3.6-02000008	工形橡胶圈	I-SHAPED RUBBER BAND	1					
3	F4-00000001	空心座定位销	HOLLOW PIN	2					
4	F4-03000025	不锈钢垫块	SPACER, PROPELLER	1					
5	F2.6-03010001	螺旋桨组件	PROPELLER ASSY	1					
6	F4-03000026	不锈钢垫片	WASHER, PROPELLER	1					
7	F4-03080000	螺母组件	NUT ASSY	1					
8	GB/T91-2.5x30	开口销2.5x30	COTTER PIN 2.5x30	1					
9	F4-03000022	阳极	ANODE, GEAR CASE ASSY	1					
10	GB/T861.1-6	内齿锁紧垫圈6	WASHER, INTERNAL TOOCH 6	1					
11	GB/T5783-M6x14	六角螺栓M6x14	BOLT M6x14	1					
12	GB/T97.1-6	平垫圈 6	WASHER 6	1					

零部件名称:	点火系统
PARTS NAME:	IGNITION ASS'Y

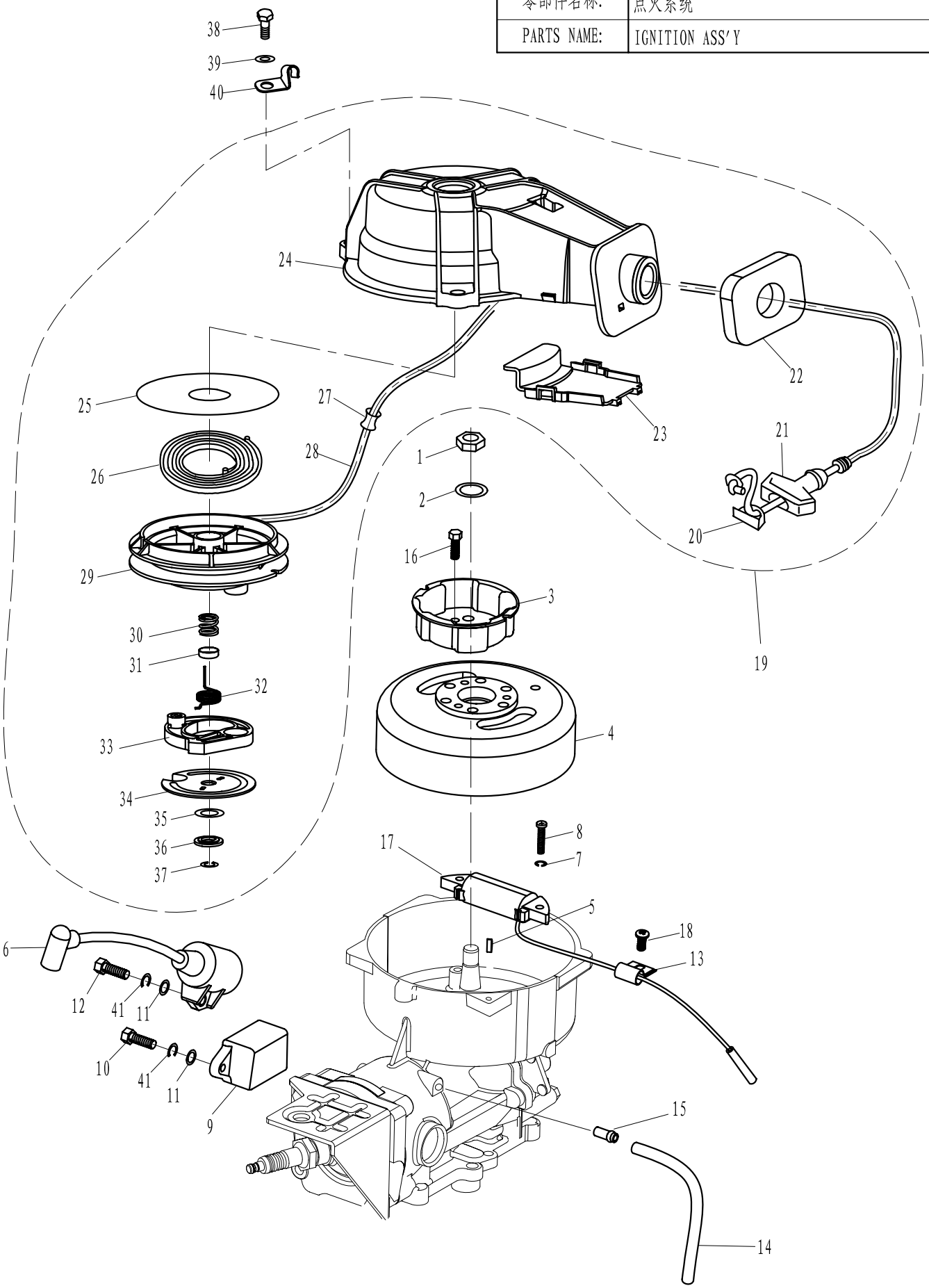

零部件名称: 点火系统

PARTS NAME: IGNITION ASS'Y

SN. 参照号码	PART NO. 零件编号	DESCRIPTION 零件名称(中文)	DESCRIPTION 零件名称(英文)	QTY 数量					REMARKS 备注
1	F4-04000026	飞轮螺母M10x1.25	HEXAGON NUT M10X1.25	1					
2	T3.6-04000016	飞轮螺母垫圈	WASHER, FLYWHEEL	1					
3	T3.6-04000007	起动轴套	PULLEY,STARTER	1					
4	T3.6-04000200	飞轮组件	FLYWHELL ASSY	1					
5	T3.6-04000006	飞轮半圆键	WOODRUFF KEY, FLYWHEEL	1					
6	T3.6-04000300	高压包组件	IGNITION COIL ASSY	1					
7	GB/T93-5	弹性垫圈5	WASHER,SPRING	2					
8	GB/T818-M5x20	十字槽盘头螺钉M5x20	PAN HEAD SCREW M5X20	2					
9	T3.6-04000400	点火模块组件	C.D.I. UNIT	1					
10	GB/T5783-M6x16	六角螺栓M6x16	BOLT M6X16	1					
11	GB/T97.1-6	平垫圈 6	WASHER 6	1					
12	GB/T5783-M6x20	六角螺栓M6x20	BOLT M6x20	1					
13	T3.6-04000005	卡箍A	CLAMP A	1					
14	T3.6-04000009	水管∅2.5x∅7x150	WATER HOSE	1					
15	T15-04010202	出水嘴	WATER PIPE, OUT	1					
16	GB/T5783-M6x12	六角螺栓M6x12	BOLT M6X12	3					
17	T3.6-04000100	触发线圈组件	PULSER COIL	1					
18	GB/T818-M5x10	十字槽盘头螺钉 M5x10	PAN HEAD SCREW M5X10	1					
19	T3.6-04040000	起动器组件	STARTER ASS'Y	1					
20	F4-04130102	起动手柄盖	HANDLE COVER, STARTER	1					
21	F4-04130101	起动手柄	HANDLE,STARTER	1					
22	T3.6-04000014	起动减震器	RUBBER DAMPER, STARTER ASSY	1					
23	T3.6-04040102	起动器盖板	COVER,STARTER	1					
24	T3.6-04040100	起动器外壳	CASING ASSY,STARTER	1					
25	T3.6-04040010	起动轮减磨片	WASHER, STARTER SHEAVE	1					
26	T3.6-04040009	涡形弹簧	VOLUTE SPRING	1					
27	F4-04130013	起动绳导管	MEATUS,START LINE	1					
28	T3.6-04040008	起动绳 (∅4x1.4m)	STARTER ROPE 4x1.4M	1					
29	T3.6-04040001	起动轮	SHEAVE,STARTER	1					
30	T3.6-04040004	起动轮压簧	SPRING, STARTER SHEAVE	1					
31	T3.6-04040003	弹簧护套	JACKET,SPRING	1					
32	T3.6-04040002	起动器扭簧	TWIST SPRING, DETENT	1					
33	T3.6-04040007	起动器卡瓣	PAWL,DRIVE	1					
34	T3.6-04040006	起动轮压板	STARTER CLAMP PLATE	1					
35	T3.6-04040011	压板减磨片	THRUST WASHER,PLATE	1					
36	T3.6-04040005	开口挡圈垫片	WASHER,CIRCLIP	1					
37	GB/T896-6	开口挡圈 6	CIRCLIP 6	1					
38	GB/T5783-M6x20	六角螺栓M6x20	BOLT M6x20	3					
39	GB/T97.1-6	平垫圈 6	WASHER 6	3					
40	T3.6-04000015	卡箍B	CLAMP B	1					
41	GB/T93-6	弹性垫圈6	SPRING WASHER 6	2					

零部件名称:	汽缸 & 曲轴箱
PARTS NAME:	CYLINDER & CRANKCASE

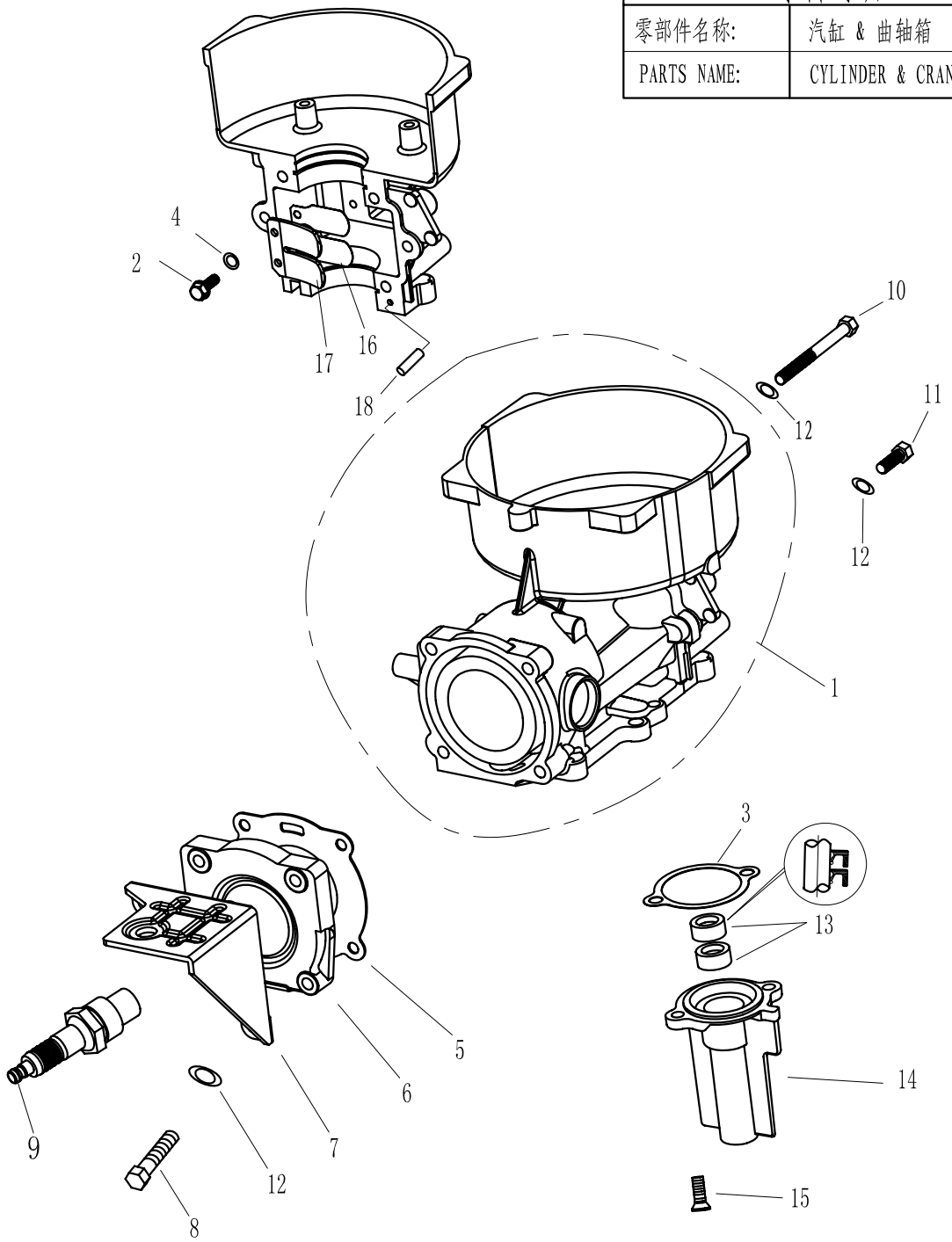

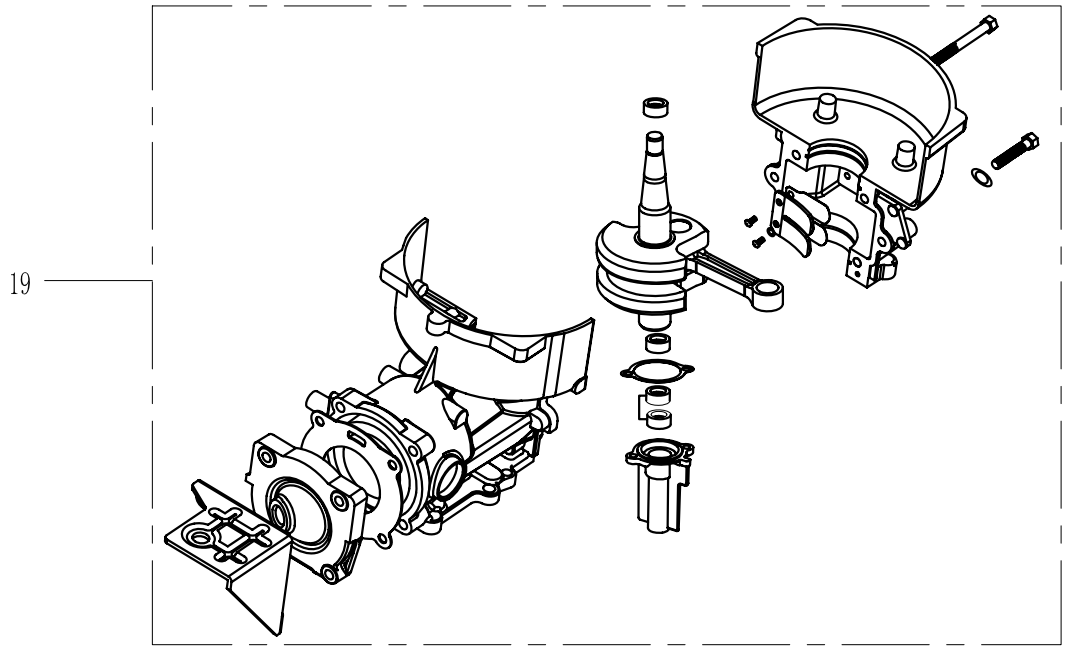

零件手册

零部件名称: 汽缸 & 曲轴箱

PARTS NAME: CYLINDER & CRANKCASE

SN. 参照号码	PART NO. 零件编号	DESCRIPTION 零件名称(中文)	DESCRIPTION 零件名称(英文)	QTY 数量					REMARKS 备注
1	T3.6-04010000	机体机座组件	CRANKCASE ASSY	1					
2	GB/T818-M4x12	十字槽盘头螺钉M4x12	PAN HEAD SCREW M4X12	2					
3	T3.6-04000004	油封壳体密封垫	GASKET, OIL SEAL SHELL	1					
4	GB/T97.1-4	平垫圈4	WAHSER 4	2					
5	T3.6-04000001	缸头复合垫	CYLINDER HEAD GASKET	1					
6	T3.6-04000002	气缸盖	CYLINDER COVER	1					
7	T3.6-04000003	油箱支撑板	FIXED PLATE,FUEL TANK	1					
8	GB/T5783-M6x30	六角螺栓M6×30	BOLT M6x30	4					
9	BPR7HS 10	火花塞	SPARK PLUG	1					
10	GB/T5782-M6x65	六角螺栓M6×65	BOLT M6x65	4					
11	GB/T5783-M6x30	六角螺栓M6×30	BOLT M6x30	2					
12	GB/T97.1-6	平垫圈6	WAHSER 6	10					
13	F4-04060004	驱动轴上油封10.8×21×7	OIL SEAL 10.8x21x7	2					
14	T3.6-04030001	油封壳体	SHELL,OIL SEAL	1					
15	GB/T819.1-M6x14	十字槽沉头螺钉M6x14	CHAMFER HEAD SCREW M6X14	2					
16	T3.6-04010202	进气阀片	PLATE,INTAKE VALVE	1					
17	T3.6-04010203	阀片限位板	LIMITATIVE PLATE , INTAKE VALVE	1					
18	F15-00000006	定位销∅6x12	PIN 6X12	2					
19	T3.6-04060000	发动机头总成	ENGINE HEAD ASSY	1					

零部件名称:	曲轴&活塞
PARTS NAME:	CRANKSHAFT & PISTON

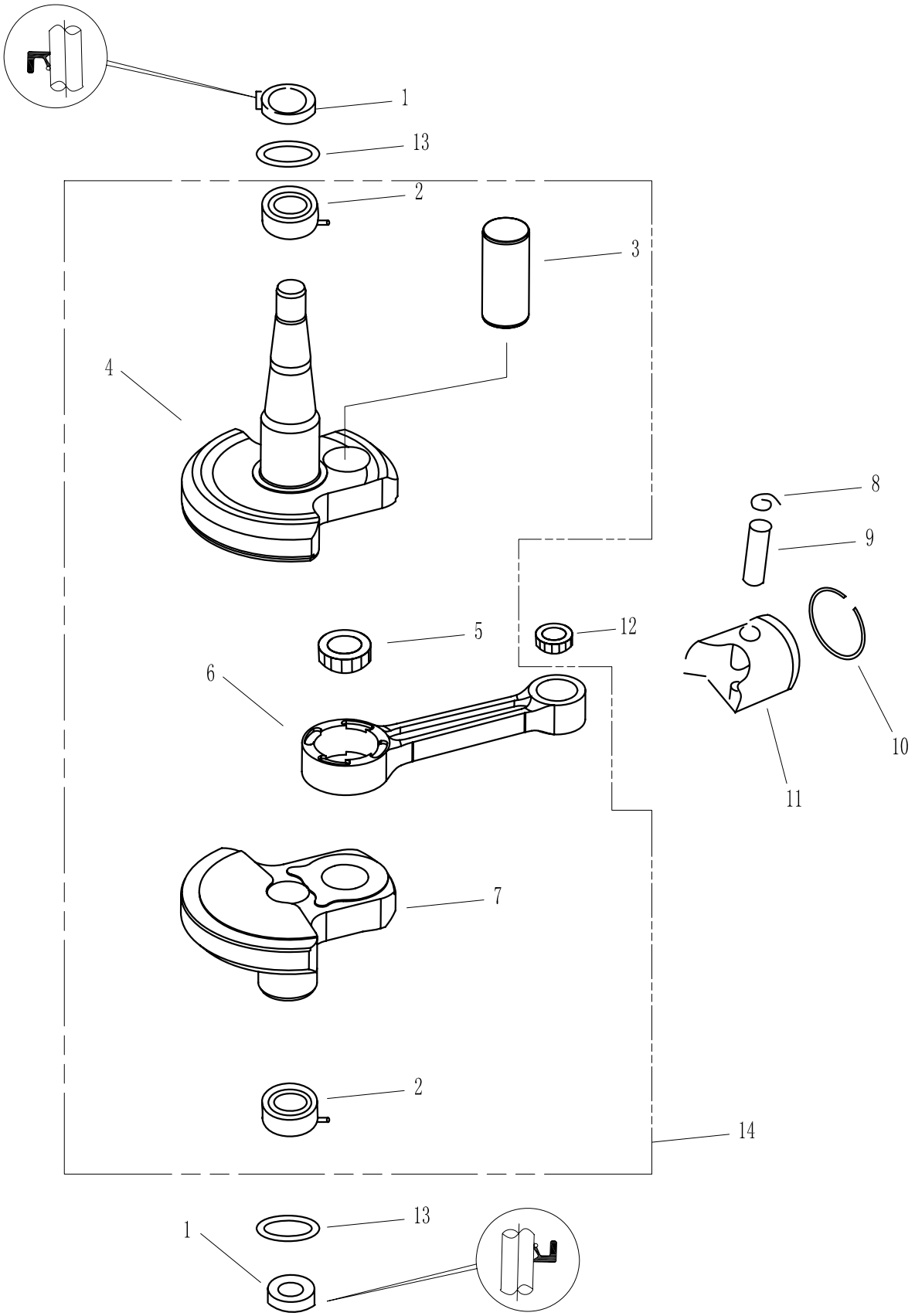

零件手册

零部件名称: 曲轴&活塞

PARTS NAME: CRANKSHAFT & PISTON

SN. 参照号码	PART NO. 零件编号	DESCRIPTION 零件名称(中文)	DESCRIPTION 零件名称(英文)	QTY 数量					REMARKS 备注
1	T3.6-04010002	曲轴油封20x42x8	OIL SEAL 20x42x8	2					
2	T3.6-04020107	深沟球轴承6004C2(带销)	DEEP GROOVE BALL BEARING 6004C2	2					
3	T3.6-04020102	曲柄销	CRANKSHAFT PIN	1					
4	T3.6-04020101	曲轴甩块A	CRANK A	1					
5	T3.6-04020103	滚针轴承	NEEDLE ROLLER BEARING	1					
6	T3.6-04020104	连杆	CONNECTING ROD	1					
7	T3.6-04020105	曲轴甩块B	CRANK B	1					
8	T3.6-04020003	活塞销卡簧	CIRCLIP	2					
9	T3.6-04020005	活塞销	PIN,PISTON	1					
10	T3.6-04020002	活塞环	PISTON RING	1					
11	T3.6-04020001	活塞	OIL SEAL	1					
12	T3.6-04020004	滚针轴承	NEEDLE BEARING	1					
13	T3.6-04010001	曲轴定位片	THRUST WASHER	2					
14	T3.6-04020100	曲轴连杆组件	CRANK SHAFT ASSY	1					

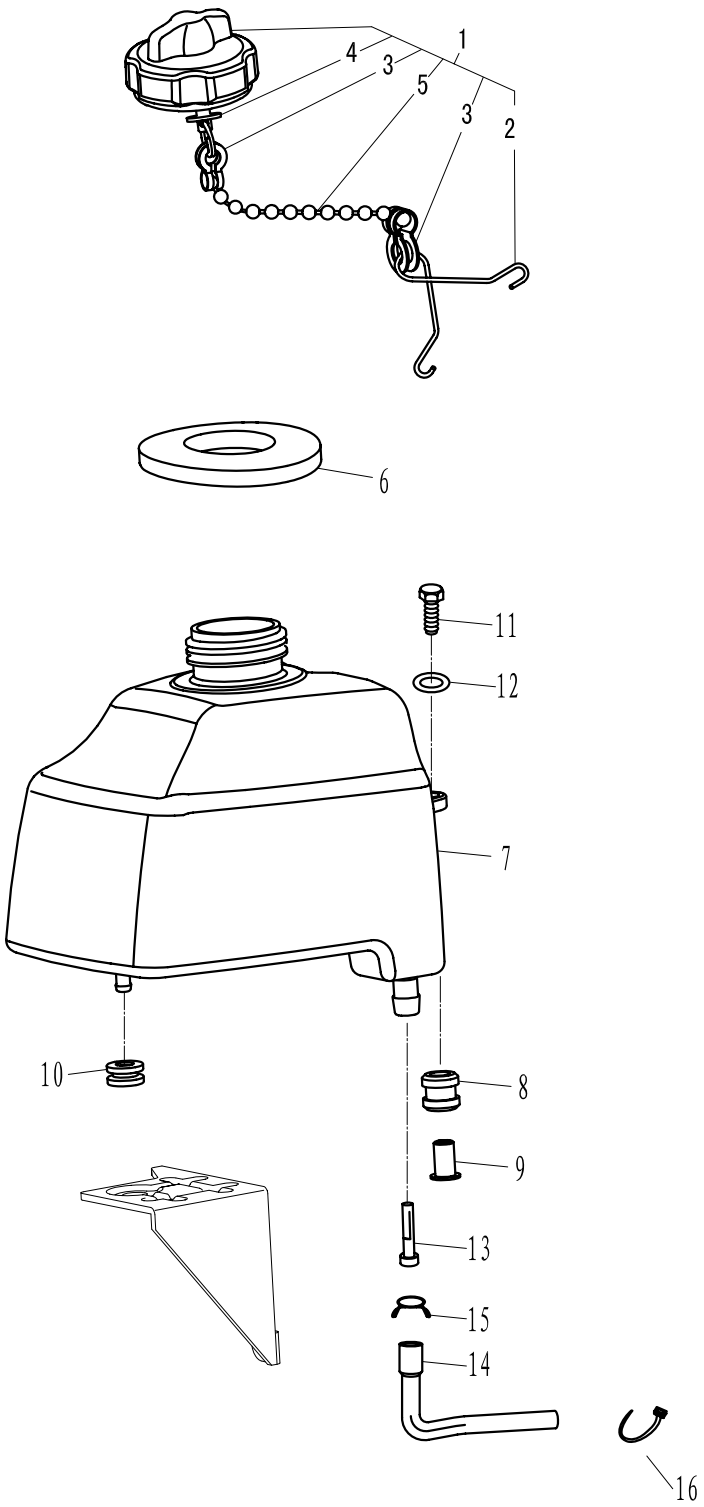
1
2
3
3
4
5
6
7
8
9
10
11
12
13
14
15
16

零件手册

零部件名称: 燃油系统

PARTS NAME: FUEL

SN. 参照号码	PART NO. 零件编号	DESCRIPTION 零件名称(中文)	DESCRIPTION 零件名称(英文)	QTY 数量					REMARKS 备注
1	F4-04120100	油箱盖组件	FUEL TANK CAP ASSY	1					
2	F4-04120103	防脱落扭簧	SPRING ,PREVENT DESQUAMATING	1					
3	F4-04120105	防脱落双环	SHEET METAL ,PREVENT DESQUAMATING	2					
4	F4-04120106	钢丝锁圈	EYELET ,STEEL WIRE	1					
5	F4-04120104	防脱链	CHAIN ,PREVENT DESQUAMATING	1					
6	F2.6-04000033	油箱口减震器	BUSHING,FUEL TANK	1					
7	T3.6-04050001	油箱	BUILT-IN FUEL TANK	1					
8	F4-04120002	油箱减震器	DAMPER ,FUEL TANK A	2					
9	T3.6-04000010	油箱衬管	BUSHING, DAMPER	2					
10	F2.6-04000034	油箱减震圈B	DAMPER B, FUEL TANK	1					
11	GB/T5783-2000	六角螺栓M6x25	HEXAGON BOLT M6x25	2					
12	GB/T97.1-6	平垫圈6	WASHER 6	2					
13	F4-04120005	油箱滤油芯	FILTER ,FUEL TANK	1					
14	T3.6-04000013	燃油管A	FUEL PIPE A	1					
15	F4-05000010	油管夹簧A	CLIP A,FUEL PIPE	1					
16	HT3.5x60	尼龙扎带	CLAMP	1					

零部件名称:	进气系统
PARTS NAME:	INTAKE

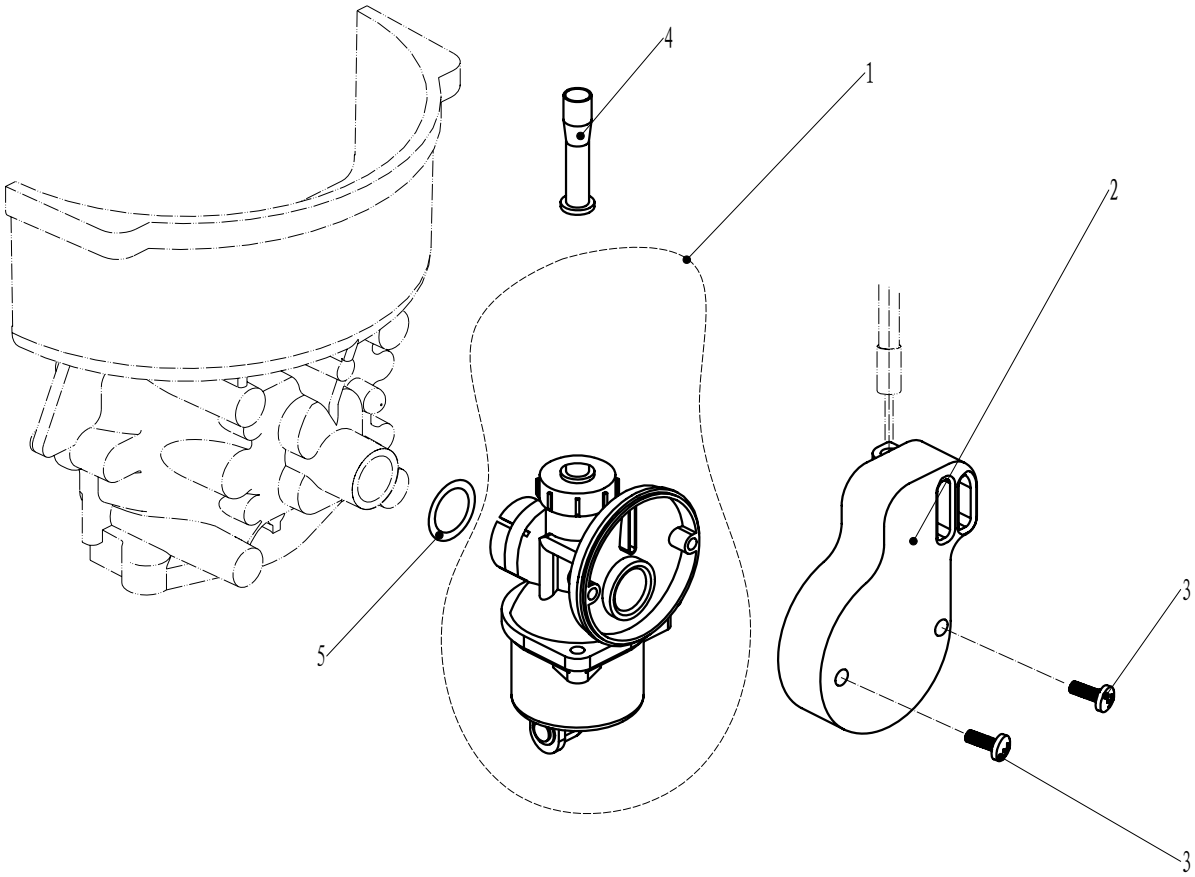

SN. 参照号码	PART NO. 零件编号	DESCRIPTION 零件名称(中文)	DESCRIPTION 零件名称(英文)	QTY 数量					REMARKS 备注
1	T3.6-04000500	化油器组件	CARBURETOR ASS'Y	1					
2	T3.6-04000008	进气消音器	INTAKE SILENCER ASSY	1					
3	GB/T818-M4x25	十字槽盘头螺钉M4×25	PAN HEAD SCREW M4x25	2					
4	T3.6-04000012	化油器护套	BUSHING, CARBURETOR	1					
5	T3.6-04000501	化油器O形圈	O-RING, CARBURETOR	1					

零部件名称:	化油器总成
PARTS NAME:	CARBURETOR ASSY

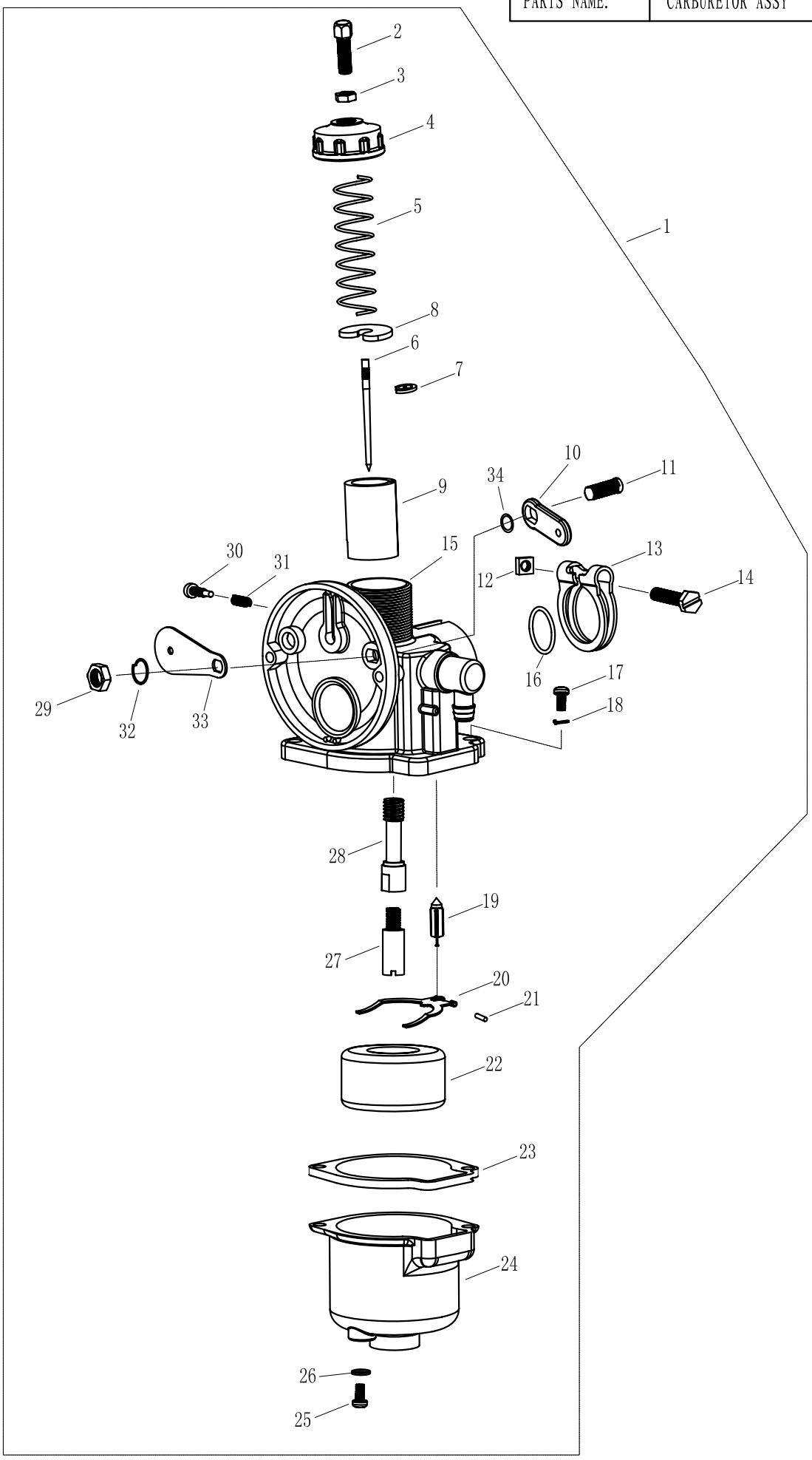

零件手册

零部件名称: 化油器总成

PARTS NAME: CARBURETOR ASSY

SN. 参照号码	PART NO. 零件编号	DESCRIPTION 零件名称(中文)	DESCRIPTION 零件名称(英文)	QTY 数量					REMARKS 备注
1	T3.6-04000500	化油器总成	CARBURETOR ASSY	1					
2	T3.6-04000531	锁紧固定螺栓	BOLT, LOCKING	1					
3	T3.6-04000530	锁紧固定螺母	NUT, LOCKING	1					
4	T3.6-04000529	化油器螺母	NUT, CARBURETOR	1					
5	T3.6-04000528	加速阀弹簧	SPRING, ACCELERZTION VALVE	1					
6	T3.6-04000525	加速阀针	NEEDLE, ACCELERZTION VALVE	1					
7	T3.6-04000526	加速阀卡片	RETAINER, ACCELERZTION VALVE	1					
8	T3.6-04000527	加速阀垫片	GASKET, ACCELERZTION VALVE	1					
9	T3.6-04000524	加速阀座	SEAT, ACCELERZTION VALVE	1					
10	T3.6-04000505	阻风门摆杆	LINK, CHOKE	1					
11	T3.6-04000504	阻风门螺钉	SCREW THROTTLE	1					
12	T3.6-04000511	化油器方螺母	SQUARE NUT, CARBURETOR	1					
13	T3.6-04000510	化油器卡箍	CLAMP, CARBURETOR	1					
14	T3.6-04000512	固定螺钉	CLAMPING, SCREW	1					
15	T3.6-04000503	化油器本体	CARBURETOR	1					
16	T3.6-04000502	化油器O型圈	SEAL	1					
17	GB/T818-M4X12	十字槽盘头螺钉M4X12	BOLT	2					
18	GB/T193-4	弹性垫圈4	WASHER, SPRING	2					
19	T3.6-04000516	针阀	VALVE, NEEDLE	1					
20	T3.6-04000518	浮子摆杆	SWING STEM, FLOAT	1					
21	T3.6-04000517	浮子销	PIN, FLOAT	1					
22	T3.6-04000519	浮子	FLOAT	1					
23	T3.6-04000520	油杯密封垫	GASKET, FLOAT CHAMBER	1					
24	T3.6-04000521	油杯	CUP, BODY	1					
25	GB/T818-M4X6	十字槽盘头螺钉M4X6	SCREW, DRAIN	1					
26	T3.6-04000523	放油螺钉垫片	GASKET	1					
27	T3.6-04000515	主量孔	JET, MAIN	1					
28	T3.6-04000514	主喷嘴	NOZZLE, MAIN	1					
29	T3.6-04000522	铜螺母	BRASS NUT	1					
30	T3.6-04000508	怠速螺钉	SCREW, AIR ADJUSTING	1					
31	T3.6-04000509	怠速螺钉弹簧	SPRING, AIR ADJUSTING	1					
32	GB/T93-6	弹性垫圈6	WASHER, SPRING	1					
33	T3.6-04000507	阻风门片	APRON, CHOKE	1					
34	T3.6-04000506	阻风垫圈	GASKET	1					

零部件名称:	底罩
PARTS NAME:	BOTTOM COWLING

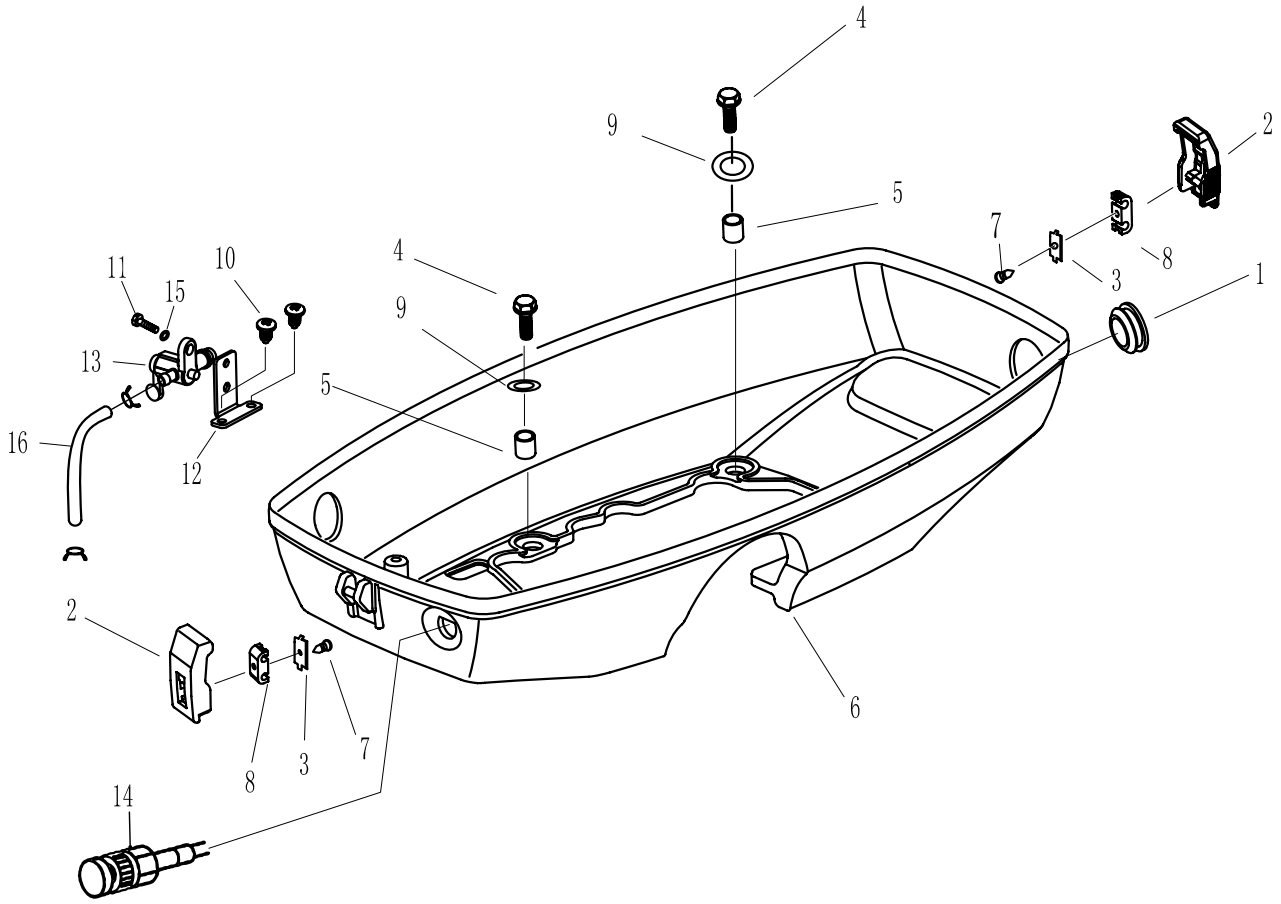

SN. 参照号码	PART NO. 零件编号	DESCRIPTION 零件名称(中文)	DESCRIPTION 零件名称(英文)	QTY 数量					REMARKS 备注
1	T3.6-05000003	圆形堵塞	RUBBER PLUG	1					
2	F2.6-05000008	顶罩锁紧钩	LOCKING HOOK	2					
3	F2.6-05000010	金属连接杆	METALLIC LINK ROD	2					
4	GB/T5783-M6x16	六角螺栓M6x16	BOLT M6X16	4					
5	T3.6-05000002	底罩垫管	SPCER, BOTTOM COWLING	4					
6	T3.6-05000001	底罩	BOTTOM COWLING	1					
7	GB/T845-2.9x6.5	十字槽盘头自攻螺钉ST2.9x6.5	PAN HEAD SCREW ST2.9X6.5	2					
8	F2.6-05000009	锁紧钩连接件	LOCKING CONNECTER	2					
9	GB/T96-6	平垫圈6	WASHER 6	4					
10	GB/T845-4.8x13	十字槽盘头自攻螺钉ST4.8x13	PAN HEAD SCREW ST4.8X13	2					
11	GB/T5783-M5x10	六角螺栓M5x10	BOLT M5X10	1					
12	T3.6-05000101	油开关固定板	FIXED PLATE, FUEL COCK	1					
13	T3.6-05000100	油开关组件	FUEL COCK ASSY	1					
14	T3.6-05000200	阻风门组件	CHOKE ASSY	1					
15	GB/T97.1-5	平垫圈5	WASHER 5	1					
15	T3.6-05000005	燃油管B Ø10xØ5	FUEL PIPE B	1					

零部件名称:	顶罩
PARTS NAME:	TOP COWLING

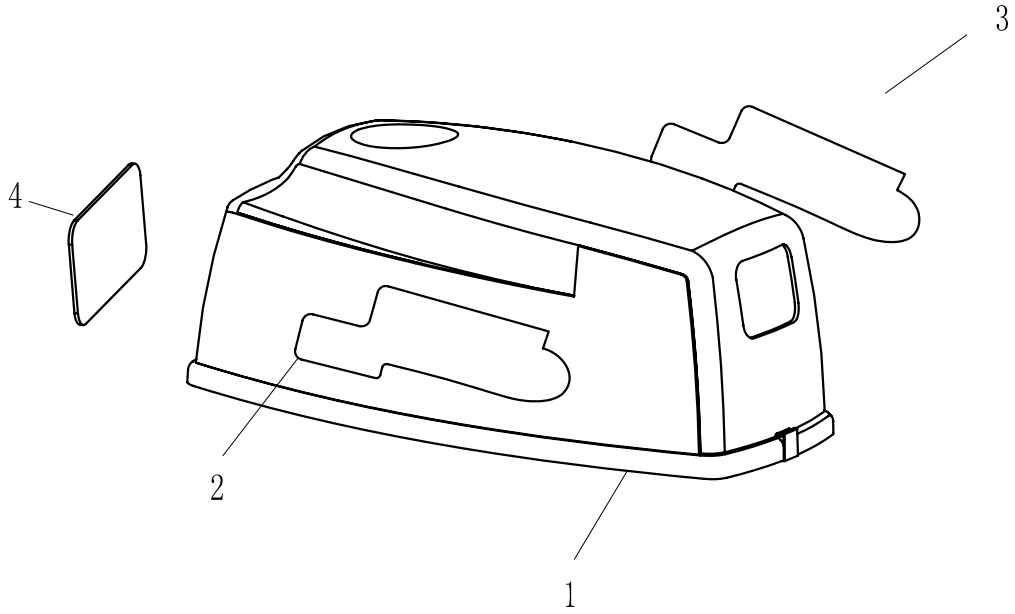

SN. 参照号码	PART NO. 零件编号	DESCRIPTION 零件名称(中文)	DESCRIPTION 零件名称(英文)	QTY 数量					REMARKS 备注
1	T3.6-00000002	顶罩	TOP COWLING	1					
2	T3.6-07000003	标贴2(左)	STICKER 2(LEFT)	1					
3	T3.6-07000004	标贴4(右)	STICKER 1(RIGHT)	1					
4	T3.6-07000001	标贴1(前)	STICKER 3(FRONT)	1					

零部件名称:	修理套件 1
PARTS NAME:	REPARE KIT 1

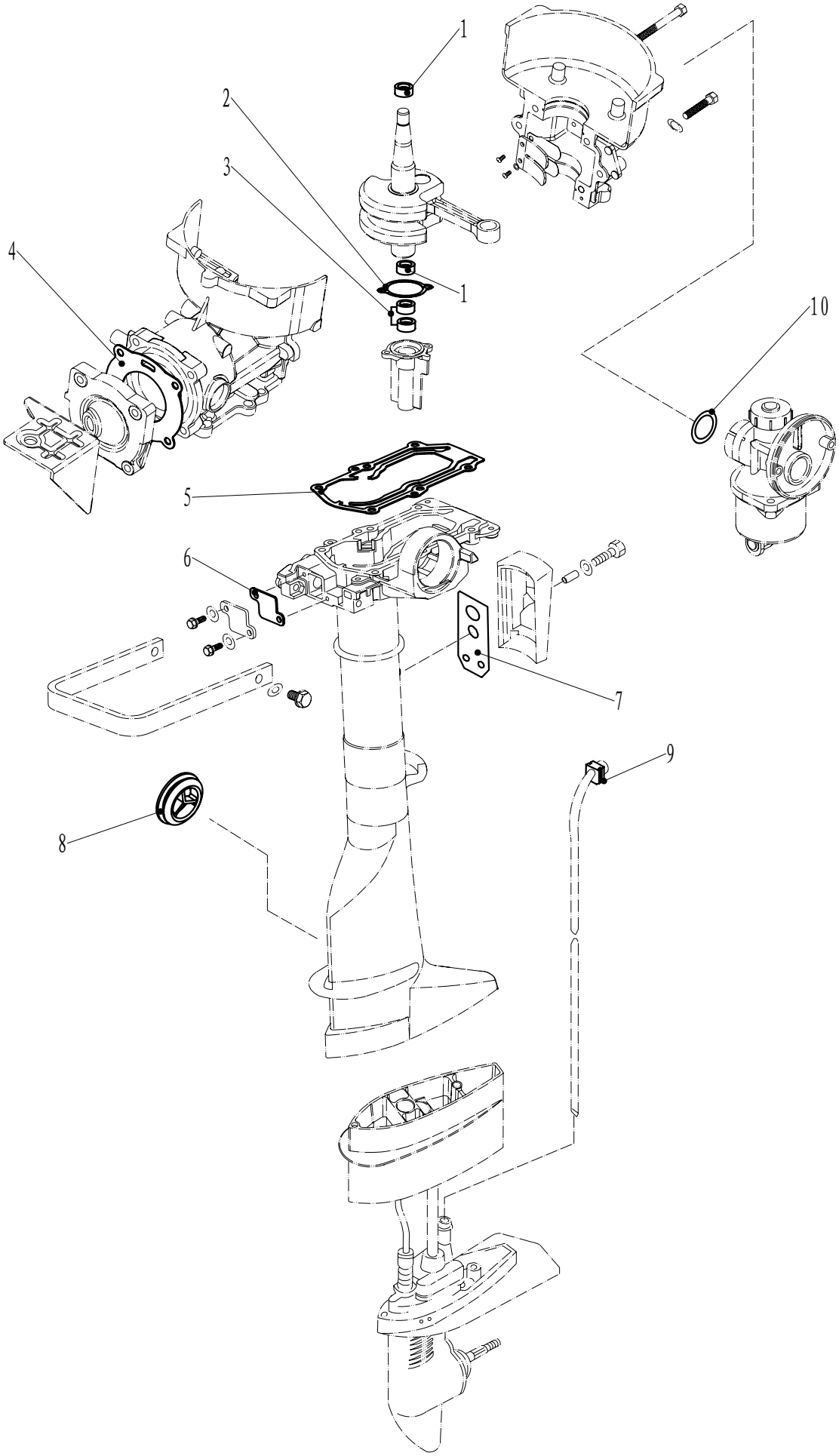

零部件名称: 修理套件 1

PARTS NAME: REPARE KIT 1

SN. 参照号码	PART NO. 零件编号	DESCRIPTION 零件名称(中文)	DESCRIPTION 零件名称(英文)	QTY 数量					REMARKS 备注
1	T3.6-04010002	曲轴油封 20×42×8	OIL SEAL 20x42x8	2					
2	T3.6-04000004	油封壳体密封垫	GASKET, OIL SEAL SHELL	1					
3	F4-04060004	驱动轴上油封10.8×21×7	OIL SEAL 10.8x21x7	4					
4	T3.6-04000001	缸头复合垫	CYLINDER HEAD GASKET	1					
5	T3.6-00000001	发动机密封垫	GASKET, ENGINE	1					
6	T3.6-02000006	盖板密封垫	GASKET, COVER	1					
7	T3.6-02000009	排气盖板垫	GASKET, EXHAUST COVER	1					
8	F4-02000012	水上装置橡胶堵头	RUBBER PLUG, UPPER CASING	1					
9	T3.6-02000008	工形橡胶圈	I-SHAPED RUBBER BAND	1					
10	T3.6-04000501	化油器O形圈	O-RING,CARBURETOR	1					

零部件名称:	修理套件2
PARTS NAME:	REPAIR KIT 2

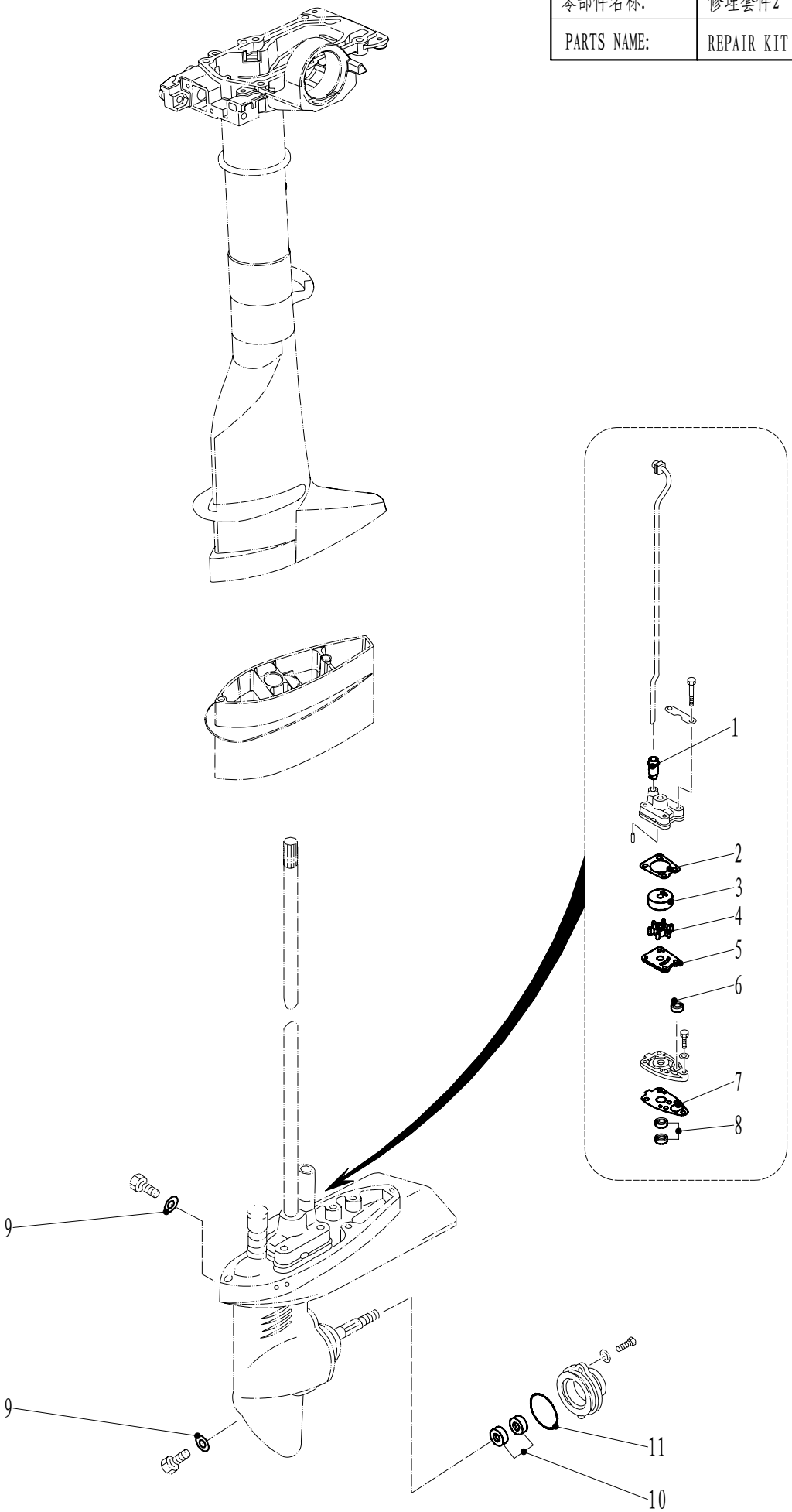

零件手册

零部件名称: 修理套件2

PARTS NAME: REPAIR KIT 2

SN. 参照号码	PART NO. 零件编号	DESCRIPTION 零件名称(中文)	DESCRIPTION 零件名称(英文)	QTY 数量					REMARKS 备注
1	F4-03000021	泵壳橡胶管	RUBBER TUBE, WATER PUMP	1					
2	F4-03000018	泵壳密封垫	GASKET, WATER PUMP COVER	1					
3	F4-03000017	水泵内壳	INNER COVER, WATER PUMP	1					
4	F4-03060000	水泵叶轮	IMPELLER,WATER PUMP	1					
5	F4-03000015	外挡板	GUIDE PLATE, WATER PUMP	1					
6	F2.6-03000009	O型密封圈	O-RING	1					
7	F4-03000011	水泵座密封垫	GASKET, WATER PUMP BASE	1					
8	F4-03000027	驱动轴下油封 10.8×21×7	OIL SEAL 10.8x21x7	2					
9	F4-03000024	注油孔螺塞垫圈	GASKET, STRAIGHT SCREW PLUG	3					
10	F4-03050002	螺旋桨轴油封 13×22×7	OIL SEAL 13x22x7	2					
11	JISB2401 P48	水下装置壳体盖O形圈	O-RING P48	1					